PERFORMANCE iN LIGHTING | powered by GEWISS

# GUELL 2+ A/W

## Part number LTF1224DA850

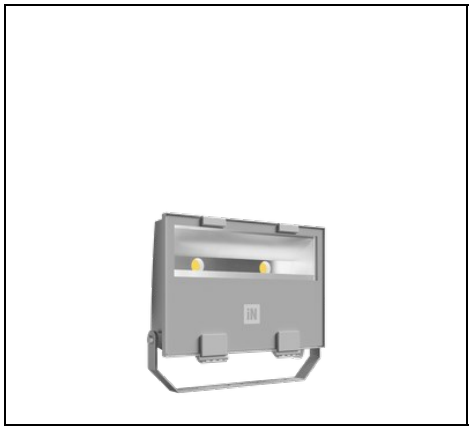

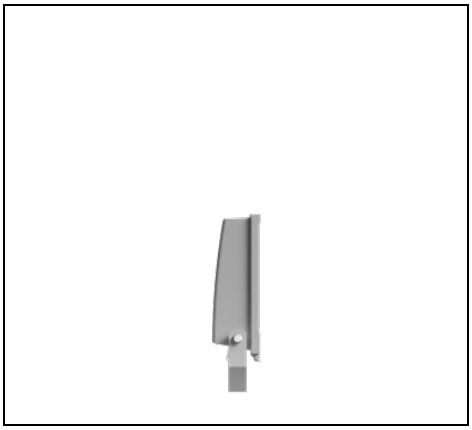

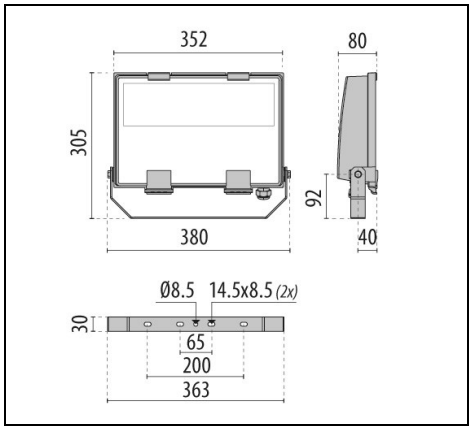


IP 66 | CLASS I | ≤-40°C | FULL CUT OFF | ULR<1 | CIEn°3>95 | SPD 10kV

### Description

LED floodlight for indoor and outdoor, comprising:
- Die-cast aluminium housing, polyester powder coat finish ISO 9227/12944 - ISO 9223 (C5)
- Extra clear, toughened, flat glass diffuser
- High-performance polished, oxidised, iridescence-free, aluminium reflector (Al 99.99)
- Anti-ageing custom moulded silicone sealing gasket(s)
- M20x1.5 cable gland for cables Ø10–Ø14 mm
- DALI dimmable
- Stainless steel locking hardware
- Fully integrated stainless steel aluminium spring clips
- Powder-coated steel tiltable bracket
- Openable and maintainable luminaire (future-proof)
- Other colour temperatures (CCT) and colour rendering index (CRI) options available. Consult factory
- Design by GIORGIO LODI

To maintain the regular updating of our products, PERFORMANCE iN LIGHTING reserves the right to make changes without prior notice. For the most up to date information we always recommend you read the latest version published on the website www.performanceinlighting.com. Delivered luminaire lumen outputs and power consumptions, including losses, are subject to a tolerance of +/- 7%, and unless otherwise stated the values apply to an ambient temperature of 25ºC. Terms of warranty are available at https://www.performanceinlighting.com/qr/company/led-warranty

For information:
**PERFORMANCE iN LIGHTING NEDERLAND**
Ronde Tocht 1 C
1507 CC Zaandam - The Netherlands
Tel. + 31 75 6708 706

**info.nl@pil.lighting**
www.performanceinlighting.com

PERFORMANCE iN LIGHTING | powered by GEWISS

## Product data

| | | | |
|---|---|---|---|
| **ETIM Group:** | EG000027 | **ETIM Class:** | EC001744 |

## General information

| | | | |
|---|---|---|---|
| **Lampholder:** | LED | **Light source:** | LED |
| **Lightsource lumen output [lm]:** | 20310 | **Luminaire lumen output [lm]:** | 17705 |
| **Luminaire wattage [W]:** | 128 W | **Luminous efficacy [lm/W]:** | 138 |
| **CRI:** | 80 | **Colour temperature [K]:** | 4000 |
| **Colour / Finishing:** | GR-94 / Metallic grey / Textured | **IP degree of protection:** | IP66 |
| **Impact resistance / impact energy:** | IK07 3J xx5 | **Protection class:** | I |
| **Optic:** | A40/W - Asymmetric Wide | **Net weight [kg]:** | 3.349 |
| **Overall length [mm]:** | 380 | **Overall width [mm]:** | 305 |
| **Overall height [mm]:** | 80 | | |

## Mechanical features

| | | | |
|---|---|---|---|
| **Shape:** | Rectangular | **Housing material:** | Aluminium |
| **Diffuser material:** | Glass | **Glow wire test [°C]:** | 650 °C |
| **Frontal exposed area [m²]:** | 0.03 | **Lateral exposed area [m²]:** | 0.02 |
| **Top exposed area [m²]:** | 0.1 | | |

## Electrical features

| | | | |
|---|---|---|---|
| **Voltage type:** | AC | **Input voltage [V AC]:** | 100/305 |
| **Input frequency [Hz]:** | 50/60 | **Power factor / COS Φ:** | >0.9 |
| **Input voltage [V DC]:** | 142/431 | **Surge protection \| Common [kV]:** | 6.000000 |
| **Surge protection \| Differential [kV]:** | 4.000000 | **Inrush current [A/µs]:** | 50 / 500 |
| **C16 2.5 mm²:** | 8 | **B16 2.5 mm²:** | 4 |

## Installation

| | | | |
|---|---|---|---|
| **Application area:** | Outdoor | **Mounting type:** | Professional floodlight |
| **Min. ambient temperature [°C]:** | -40 | **Max. ambient temperature [°C]:** | 35 |
| **Min. distance from lighted object [m]:** | 0.10 | | |

## Light features

| | | | |
|---|---|---|---|
| **MacAdam:** | 3 | **Lumen maintenance:** | L80B10@65000h |
| **Distribution of light emission:** | Direct | **Luminous Intensity Class:** | G*6 |
| **Zero light pollution (ULR = 0%):** | | **IPEA* (road lighting):** | A4+ |
| **IPEA* (large areas, roundabouts):** | A8+ | **IPEA* (cycle-pedestrian):** | A4+ |
| **IPEA* (green areas):** | A4+ | **IPEA* (historic city centers):** | A10+ |

To maintain the regular updating of our products, PERFORMANCE iN LIGHTING reserves the right to make changes without prior notice. For the most up to date information we always recommend you read the latest version published on the website www.performanceinlighting.com. Delivered luminaire lumen outputs and power consumptions, including losses, are subject to a tolerance of +/- 7%, and unless otherwise stated the values apply to an ambient temperature of 25ºC. Terms of warranty are available at https://www.performanceinlighting.com/qr/company/led-warranty

For information:
**PERFORMANCE iN LIGHTING NEDERLAND**
Ronde Tocht 1 C
1507 CC Zaandam - The Netherlands
Tel. + 31 75 6708 706

**info.nl@pil.lighting**
www.performanceinlighting.com

To maintain the regular updating of our products, PERFORMANCE iN LIGHTING reserves the right to make changes without prior notice. For the most up to date information we always recommend you read the latest version published on the website www.performanceinlighting.com. Delivered luminaire lumen outputs and power consumptions, including losses, are subject to a tolerance of +/- 7%, and unless otherwise stated the values apply to an ambient temperature of 25ºC. Terms of warranty are available at https://www.performanceinlighting.com/qr/company/led-warranty

For information:
**PERFORMANCE iN LIGHTING NEDERLAND**
Ronde Tocht 1 C
1507 CC Zaandam - The Netherlands
Tel. + 31 75 6708 706

**info.nl@pil.lighting**
www.performanceinlighting.com

## Photometric data

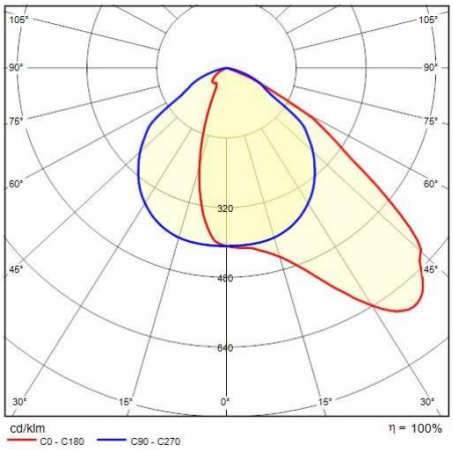


## Optional accessories

### GUELL 2+

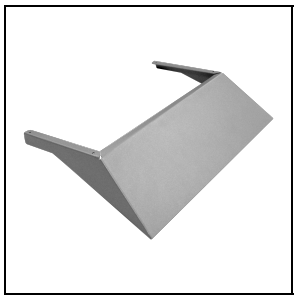

**LTF1A3252**

Louvre GUELL 2+

GR-94 / Metallic grey

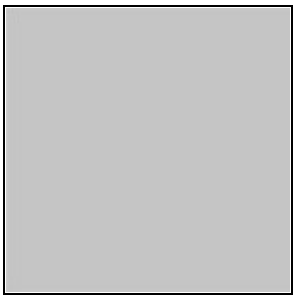

**LTF1A5203**

Protective grid GUELL 2+

AN-20 / Polished metallic

**LTF1A2212**

Single pole top support GUELL 2+

GR-94 / Metallic grey

**LTF1A2222**

Double pole top support GUELL 2+

GR-94 / Metallic grey

**14173394**

Wall support 500 mm/19.69" GUELL 1/2

GR-94 / Metallic grey

**14173494**

Wall support 1000 mm/39.37" GUELL 1/2

GR-94 / Metallic grey

To maintain the regular updating of our products, PERFORMANCE iN LIGHTING reserves the right to make changes without prior notice. For the most up to date information we always recommend you read the latest version published on the website www.performanceinlighting.com. Delivered luminaire lumen outputs and power consumptions, including losses, are subject to a tolerance of +/- 7%, and unless otherwise stated the values apply to an ambient temperature of 25ºC. Terms of warranty are available at https://www.performanceinlighting.com/qr/company/led-warranty

For information:
**PERFORMANCE iN LIGHTING NEDERLAND**
Ronde Tocht 1 C
1507 CC Zaandam - The Netherlands
Tel. + 31 75 6708 706

**info.nl@pil.lighting**
www.performanceinlighting.com